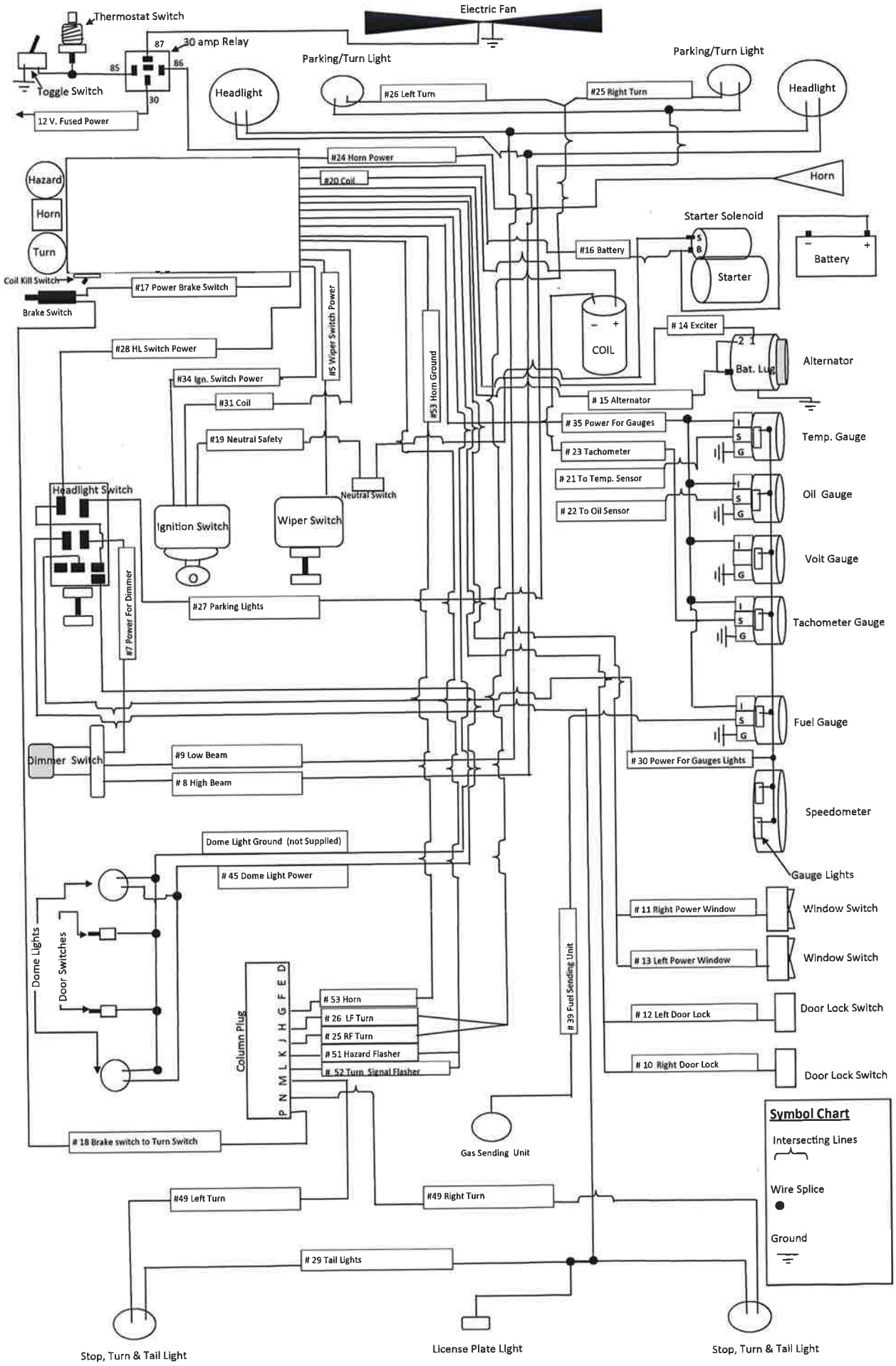
Thermostat Switch
30 amp Relay
87
85
86
30
Toggle Switch
12 V. Fused Power
Electric Fan
Parking/Turn Light
Parking/Turn Light
Headlight
Headlight
#26 Left Turn
#25 Right Turn
#24 Horn Power
#20 Coil
Horn
Hazard
Horn
Turn
Coil Kill Switch
Brake Switch
#17 Power Brake Switch
Starter Solenoid
S
B
Starter
Battery
#16 Battery
COIL
14 Exciter
Bat. Lug
Alternator
#28 HL Switch Power
#34 Ign. Switch Power
#31 Coil
#19 Neutral Safety
#5 Wiper Switch Power
#53 Horn Ground
15 Alternator
35 Power For Gauges
23 Tachometer
21 To Temp. Sensor
22 To Oil Sensor
Temp. Gauge
Oil Gauge
Volt Gauge
Tachometer Gauge
Fuel Gauge
Speedometer
Gauge Lights
Headlight Switch
Ignition Switch
Wiper Switch
Neutral Switch
#7 Power For Dimmer
#27 Parking Lights
Dimmer Switch
#9 Low Beam
8 High Beam
30 Power For Gauges Lights
Dome Light Ground (not Supplied)
45 Dome Light Power
Dome Lights
Door Switches
Column Plug
P N M L K J H G F E D
53 Horn
26 LF Turn
25 RF Turn
51 Hazard Flasher
52 Turn Signal Flasher
39 Fuel Sending Unit
11 Right Power Window
13 Left Power Window
Window Switch
Window Switch
12 Left Door Lock
10 Right Door Lock
Door Lock Switch
Door Lock Switch
18 Brake switch to Turn Switch
Gas Sending Unit
Symbol Chart
Intersecting Lines
Wire Splice
Ground
#49 Left Turn
#49 Right Turn
29 Tail Lights
Stop, Turn & Tail Light
License Plate Light
Stop, Turn & Tail Light